LED Outdoor Wall Lamp

W2821

IP65

3 YEARS GUARANTEE | النور نوركو The light is NOORCO | RoHS

Outdoor | AC 176-240V | 50/60 Hz | CCT 3000K 4000K 6500K | Ra ≥80 | IP65 | Beam Angel 36° | Chips SMD

Item Code	P(W)	CCT(K)	Total Lumen	Beam Angle	Dimensions in mm A	B	C	kg
W2821	10	6500/4000/3000	318	120°	225	65	95	0.88

Dimensions in mm

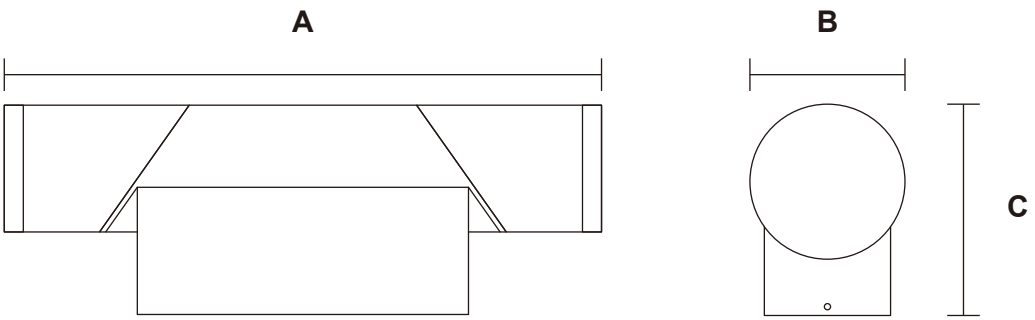

MilKy white PC cover, uniform luminescence

SeiKo aluminum lamp bodyHas good anticorrosion property, anti rust no fading, durable

Description:
LED Outdoor Wall Lamp

Main material:
Aluminum+Engineering plastics

Specification
Energy saving, up to 85% energy saving comparing to standard halogen and incandescent lamps
High quality light, high color rending, less heat, no UV or IR radiation
Build-in LED Driver
IP65

Applications
. ParK
. Square
. Corridor

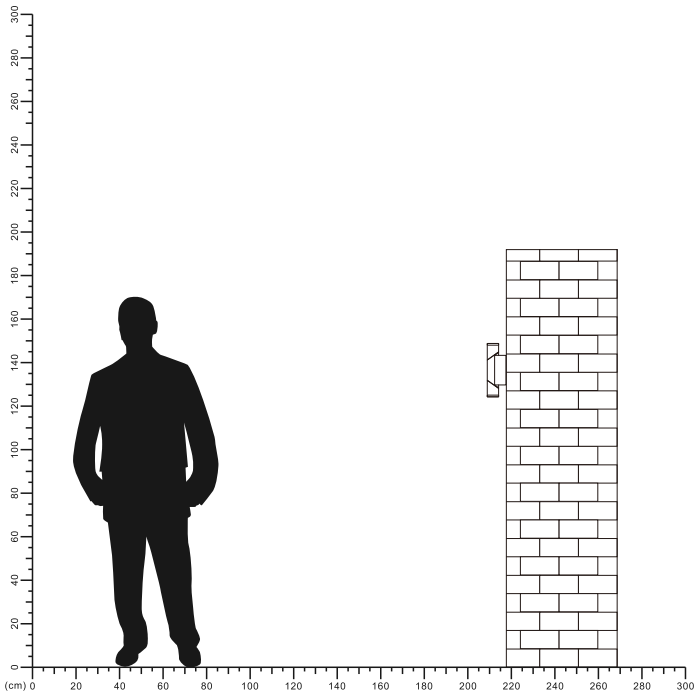

LUMINOUS INTENSITY DISTRIBUTION DIAGRAM

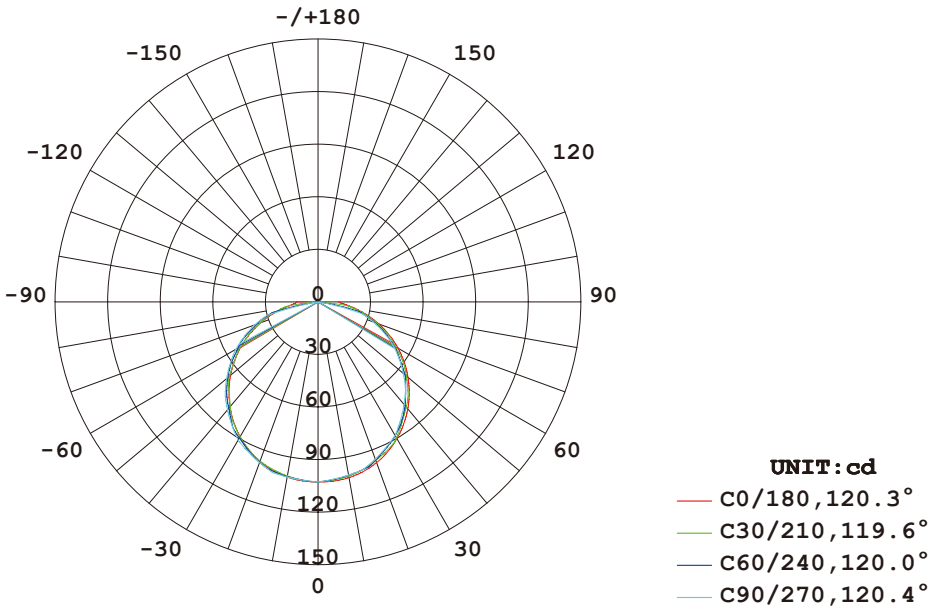

AVERAGE BEAM ANGLE(50%):121.1 DEG

Illuminance at a Distance

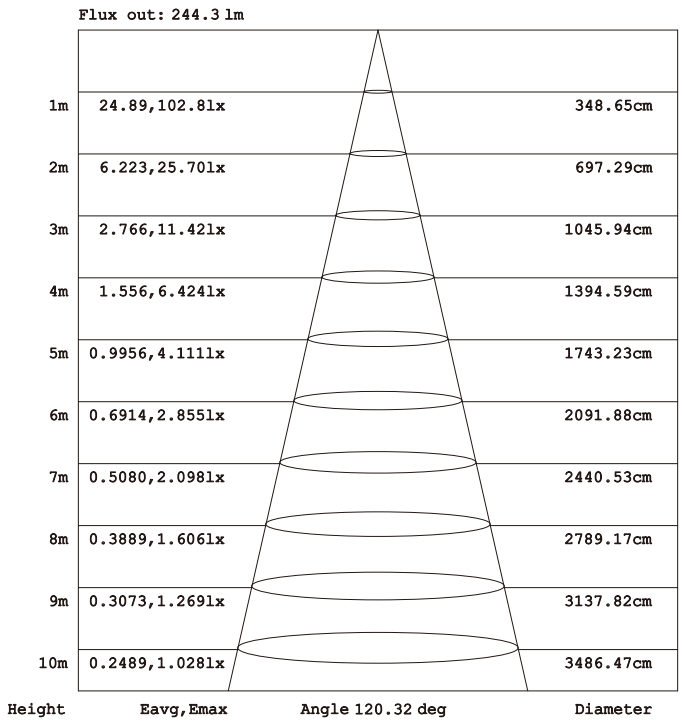

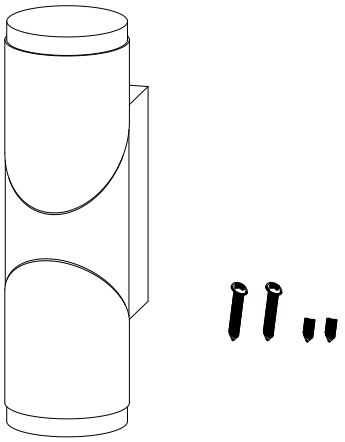

1

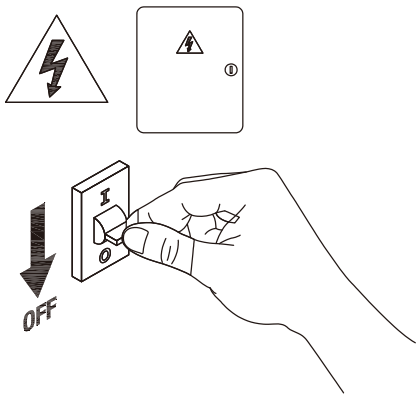

2 Turn off The Power

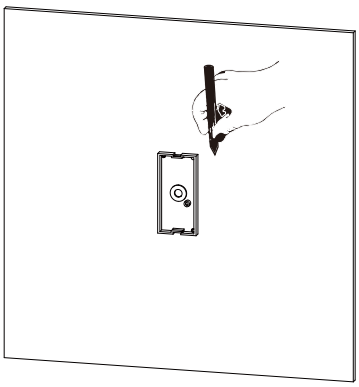

3 Draw the points that need to be drilled

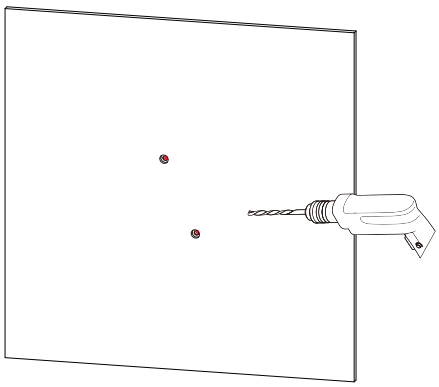

4 Drill holes in the wall

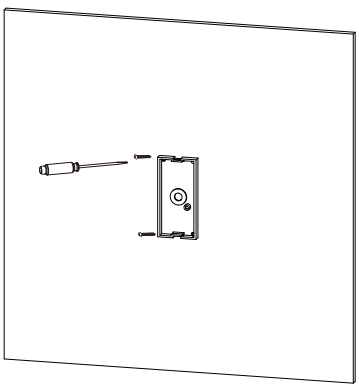

5 install screw

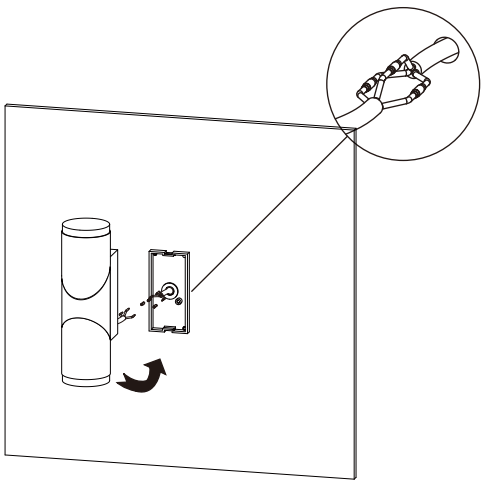

6 Installation of the shell

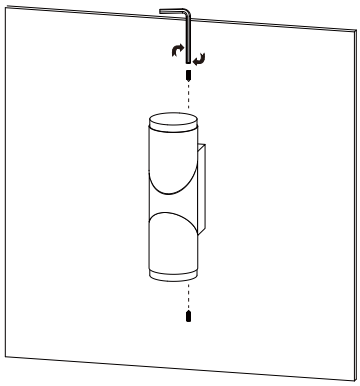

7 install screw

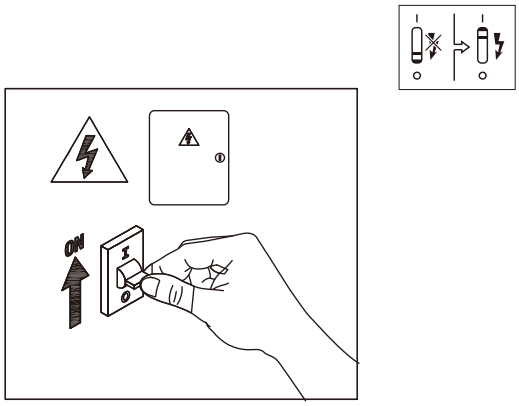

8 Turn on the power